TECHNOLOGY PROFILE:
ACID RECOVERY AND RECYCLE TECHNOLOGIES

By Bryan Cullivan, Beta Control Systems | June 1, 2020

The most common pickling, leaching, and passivation acids are the mineral acids: Sulfuric, Hydrochloric, and Nitric. Mixtures of Hydrofluoric acid and Nitric acid are also used in cleaning, etching, passivating, and chemical milling. Although the organic acids like Acetic, Phosphoric, Citric, Oxalic, and Tartaric have been used in small quantities and in limited applications, the mineral acids have endured. In production uses of highly corrosive mineral acid, the rate of reaction slows as metal oxides dissolve into soluble salt. When the acids wane and reach the end of their effective life, they are either: 1. discarded as a hazardous waste, 2. neutralized into a solid waste sludge, or 3. processed through a recovery system to reclaim the valuable remaining acid. Focusing on the latter, this article will describe the operation of the most prevalent acid recovery and recycle technologies in use today.

- Sulfuric Acid Recovery – low temperature Crystallization
- Hydrochloric Acid Recycle – Pyrohydrolysis (Spray Roaster/Fluidized bed)
- Hydrochloric Acid Recovery – Vacuum Evaporation, Acid Sorption, Diffusion Dialysis, Chemical Replacement
- Mixed Acid Recovery (HF/HNO_3) – Acid Sorption, Vacuum Evaporation, Pyrohydrolysis, Nanofiltration

SULFURIC ACID RECOVERY: CRYSTALLIZATION

Pickling and etching of steel and copper is usually performed in a 12% – 24% acid solution at bath temperatures between 55ºC (130ºF) and 75ºC (167ºF). Sulfuric solutions for electrocleaning and ore leaching are usually kept close to 40ºC. The higher solubility of many metal salts in a heated solution allows a saturated solution to be chilled, creating hydrated crystals in the chilled solution. The crystals are commonly separated and collected from the chilled solution through centrifugation or gravity filtration.

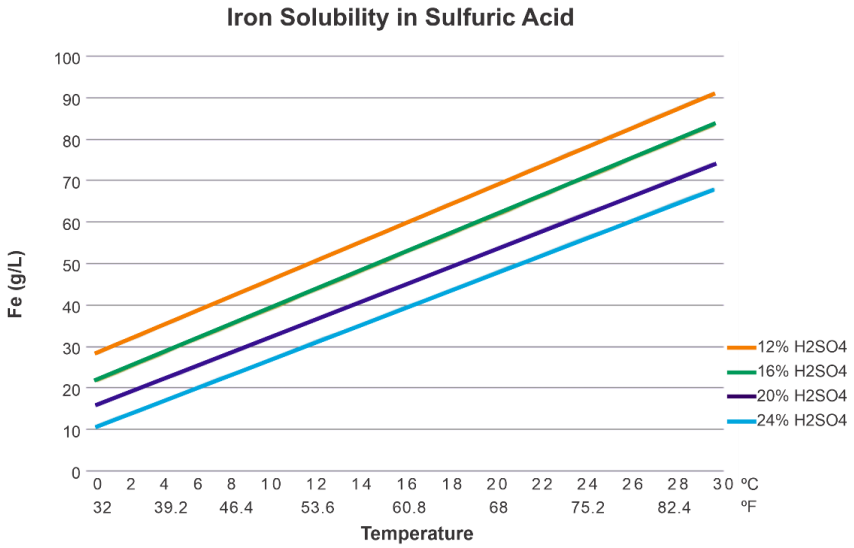

Figure 1 Iron solubility in sulfuric acid

The process flow diagram below depicts a typical sulfuric acid crystallizer used in a steel pickling plant. The total power consumed in the operation of the recovery system approaches 41 kW/ton of spent acid processed. The use of a plate and frame (liquid/liquid) heat interchanger reduces the crystallizer energy demand by greater than 30%.

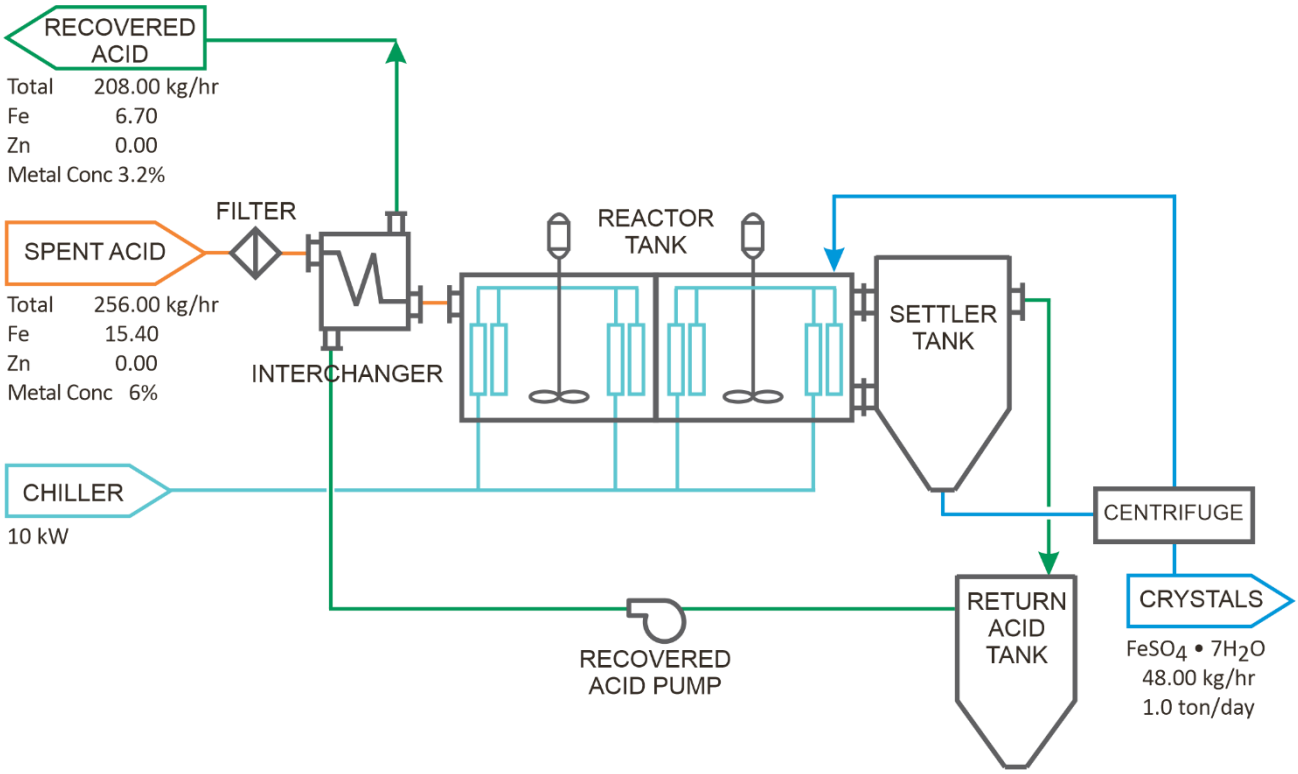

Figure 2 Sulfuric acid recovery using crystallization technology

Both batch and continuous crystallization processes use fluid transport, filtration, mixing, heat exchange, refrigeration, and centrifuge (screen) separation to achieve the recycle of sulfuric acid.

Ferrous sulfate heptahydrate and copper sulfate tetrahydrate crystals recovered in the process are sold as a co-product. Thousands of tons are produced each year and used in agriculture, wastewater treatment, and mining. The low operating cost of an acid recovery crystallizer and the value of the co-product make this technology preferable to disposal and neutralization.

Hydrochloric Acid Recycle

Pyrohydrolysis

Differing from the other technologies covered in this article, pyrohydrolysis is recycle rather than recovery technology. Originating from the thermolytic technology used in mining, Pyrohydrolysis has been used since the 1950s to recycle spent hydrochloric acid from large steel operations. Both fluidized bed and spray roasting thermally break the metal chloride bond and create metal oxide and hydrogen chloride products. The metal oxides are collected as beads or powder at the bottom of the roaster. The

resulting hydrogen chloride mixes with water to form a near azeotrope of hydrochloric acid after absorption and rectification.

$12\ FeCl_2 + 3\ O_2 = 8\ FeCl_3 + 2\ Fe_2O_3$ (oxidation of ferrous to ferric)

$2\ FeCl_3 + 3\ H_2O = 6\ HCl + Fe_2O_3$ (decomposition reaction)

A simplification of the half reaction: $FeCl_2 + H_2O + energy \rightleftharpoons FeO + 2HCl$

Spent acid travels through an evaporative step before entering the roaster. This preconcentrated iron chloride solution is then pressure injected tangentially into a 550ºC – 700ºC ceramic-lined roaster. The first step of the reaction is the oxidation of ferrous chloride to ferric chloride in the presence of oxygen in the combustion gas. The ferrous chloride concentrate oxidizes and decomposes to a ferric oxide (Fe_2O_3) solid that is constantly removed from the bottom of the roaster. The hydrogen chloride gas and water generated in the reaction exit the roaster to be scrubbed and concentrated to a near azeotropic HCl concentration in the absorber/rectifier column. Pyrohydrolysis requires between 30 and 50 therms of natural gas to process one ton of spent acid. The process recycles 90+% of the original fresh acid back into high quality pickling acid.

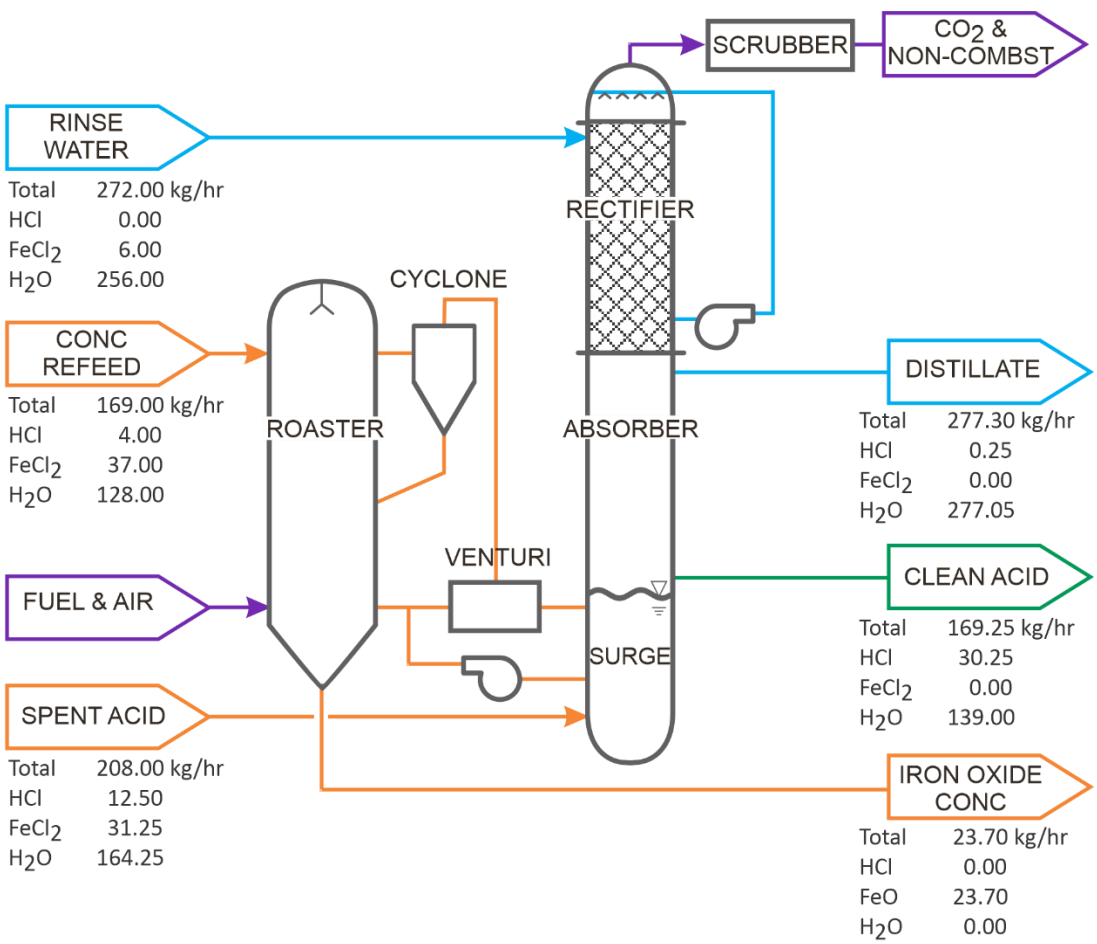

Figure 3 Pyrohydrolysis (processing 5 metric tons/day)

The ferric oxide co-product of some fluidized bed systems can be re-melted into steel. If the contaminant levels are low, the Fe_2O_3 powder from the spray roasting method can also be used in pigment, ferrite magnets, cosmetics, and polishing applications. Environmental monitoring of the process includes accidental emissions and release of iron oxide dust, HCl vapor, and chlorine.

HYDROCHLORIC ACID RECOVERY

When a large portion of the hydrochloric acid has been consumed in a pickling or leaching process, the bath is considered *spent*. If the median starting HCl concentration for the bath is 15%, the median concentration of *spent* acid would average 7%. The Fe concentration in the spent acid varies based on the type of rust dissolved. The reactions below depict oxidized rust (orange) and an FeO (green) surface rust in steel processing.

Equation 1: **$6\ HCl\ (aq) + Fe_2O_3\ (s) \text{--->} 2\ FeCl_3\ (aq) + 3\ H_2O\ (l)$**
Equation 2: **$2\ HCl\ (aq) + FeO(s) \text{--->} FeCl_2\ (aq) + H_2O\ (g)$**

Since most of the iron in spent acid solutions tests as Fe (II), the second equation predominates.

Some production plants are designed with several large pickling tanks to allow extended pickling time. The primary purpose of the is to consume as much HCl as possible before disposal or treatment. Another method to maximize acid usage is employed by many *push/pull* sheet and coil pickling operations. The continuous strip steel travels countercurrent to the flow of hydrochloric acid, cleaning the surface of the steel. The final countercurrent pickle tank is heated to increase the reactivity and consumption of the acid. In contrast, most wire, tube, and metal finishing plants choose to dispose, treat, or recover their acid rather than sacrifice plant floorspace, time, and energy to squeeze value from the acid. Management is often faced with the dilemma of allowing the *tail to wag the dog*—sacrificing speed of production over waste minimization. Recovery of the acid addresses that conundrum. Most of the commonly used and proven technologies are described below.

VACUUM EVAPORATION

Hydrochloric acid is a binary solution of HCl gas in water used extensively in steel pickling and mining. When the pickling action slows, the inhibited solution of acid, water, and metal salt enters a vacuum evaporator and is heated above the boiling point of HCl (108.6ºC) and water. To maintain sensible heat and ensure a more efficient heat cycle, the forced circulation of the mother liquor generates a mild backpressure. With the rest of the process operating under vacuum, the pressurized and heated solution is sprayed into a separator where both the water and hydrochloric acid co-flash to vapor. The remaining metal chloride salt solution concentrates as more spent acid enters the evaporator and the HCl/H_2O solution is vaporized. When the metal salt's specific gravity reaches the target, the metal chloride concentrate is pumped to a storage tank for transport to an end user.

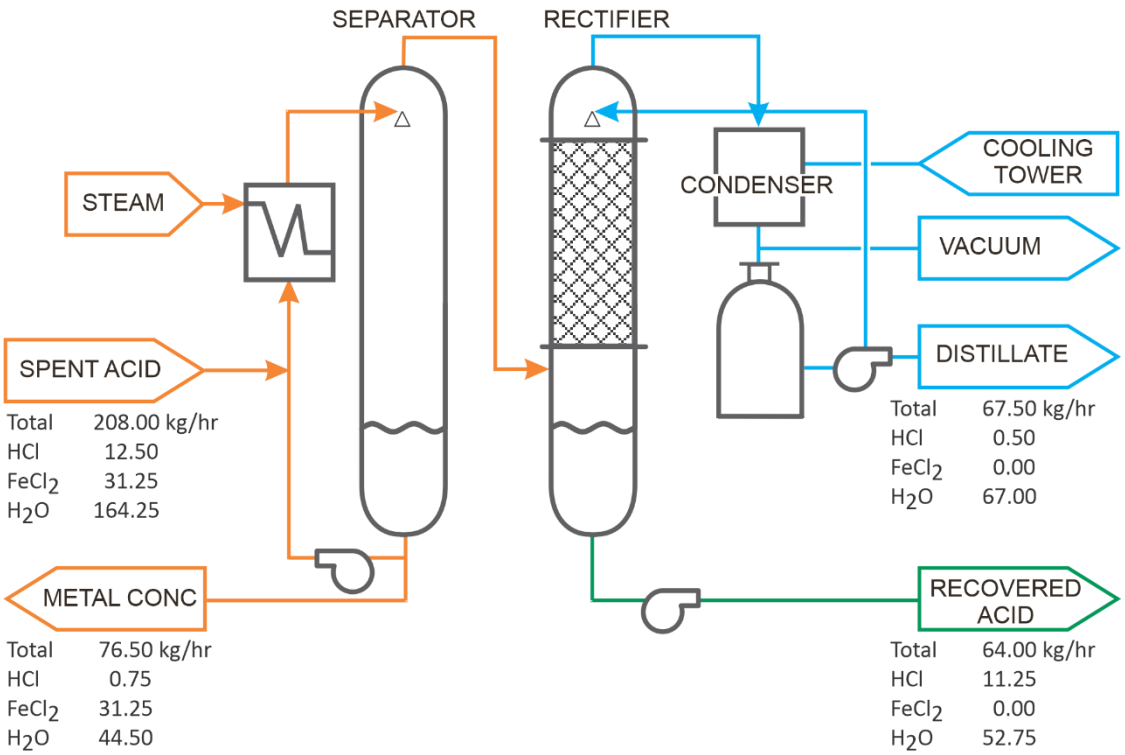

Figure 4 Vacuum Evaporation (processing 5 metric tons/day)

The HCl/H_2O vapor travels through a rectifier filled with acid-proof packing. A spray of water descending over the top of the packing mixes with HCl vapor as it descends. The droplets increase in acid concentration as they descend and approach the 20% HCl azeotrope. The remaining water vapor passes upward through the packing and into a water-cooled condenser. The vapor condenses into reusable process water. The rectification process results follow the McCabe-Thiele equation.

For efficiency, evaporative recovery operates under partial vacuum. This depresses the boiling point of HCl from 108.6ºC (227ºF) to less than 80ºC (175ºF). Vacuum processing lowers the energy consumption, cost of construction, and potential for chemical excursions.

All three major streams from the vacuum evaporator are re-used or repurposed. The final acid concentration ranges between 15% and 20%, well within most pickling and leaching parameters. If acid concentrations are required above the 20% azeotrope, the addition of a Dual Pressure Distillation section would be required. In steel pickling or leaching, the iron chloride concentrate captured has commercial value in water treatment, odor suppression, and as a precursor to the production of ferric chloride. Processing one ton of spent acid requires approximately 30 therms of natural gas to produce the required steam.

ACID SORPTION (RETARDATION)

This technology is a sorption process by which acid bonds to the special resin inside a packed "short bed" column while allowing the metal chloride and water to pass through. When the resins have reached maximum acid loading, the column is eluted using water to recover the absorbed acid on a batch basis. The process flow diagram below follows a near spent HCl solution from a steel pickling plant. The recovered acid stream contains residual iron and water. The waste metal concentrate is nearly devoid of acid but requires treatment as a liquid waste. The sorption process allows continuous use of the acid with low levels of metal contamination. Efforts over the past decade to minimize metal carryover into the recovered, clean acid have shown improvement. Selective capture and reuse of different fractions of the eluate tend to lower the waste and enrich the recovered acid product.

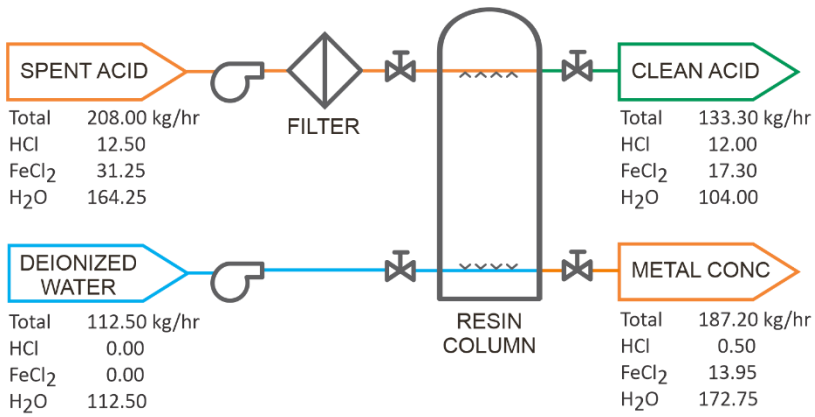

Figure 5 Acid Sorption (processing 5 metric tons/day)

DIFFUSION DIALYSIS

This membrane process operates under the diffusion principal where high concentrations of molecules spontaneously travel to areas of lower concentration. Eventually the concentration approaches equilibrium. Dialysis deals with the rate of molecular movement through a semi-permeable membrane. Diffusion Dialysis uses an anion exchange (positively charged) membrane as the semi-permeable barrier. Although also positively charged, acid acts more like a small protonated water molecule and passes through the membrane at an order of magnitude higher than the much larger charged metal salts. Clean water (dialyzate) is fed on the permeate side of the membrane to absorb acid passing through the semi-permeable membrane surface. By passing in a countercurrent manner, the acid concentration increases as it passes across a long, serpentine path toward saturation. Diffusion Dialysis is a continuous process that depends on excellent mass transfer and multi-layered stacks of membranes. The membranes do not completely reject the metal ions but greatly retard their concentration. The membranes may be impacted by fouling and concentration polarization. Prefiltration and process control are very important to process efficiency and membrane longevity.

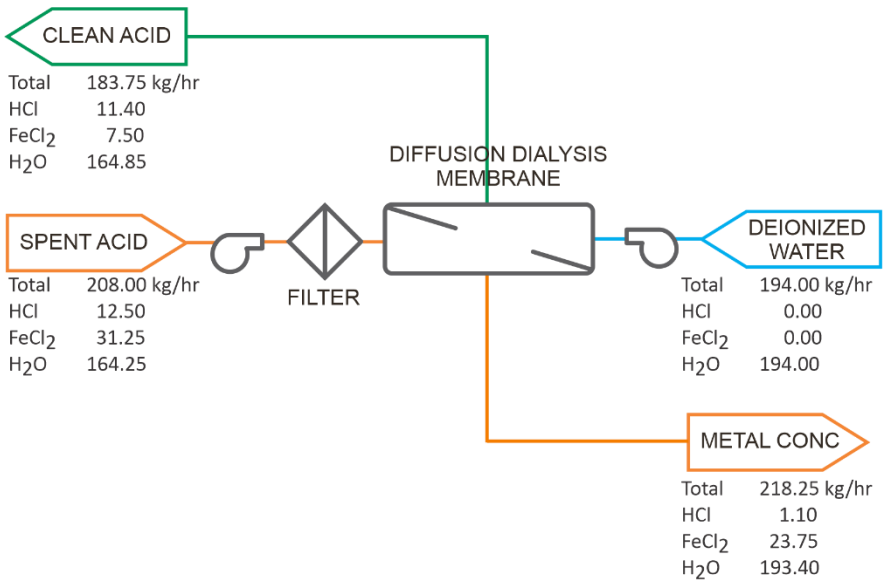

Figure 6 Diffusion Dialysis (processing 5 metric tons/day)

ACID REPLACEMENT WITH OXALIC ACID

Recent attempts to recover hydrochloric acid by reacting the spent acid with oxalic acid have shown some promise. Although the use of oxalic acid with iron-laden acid leach in the mining and minerals industry is not novel, use of the organic acid to treat and recover spent hydrochloric acid is. The basic reaction seems to be:

$$FeCl_2 + H_2C_2O_4 = Fe(C_2O_4)(s) + 2HCl$$

This batch process adds a measured amount of oxalic acid powder to a mixing reactor filled with an aliquot of the pickling bath. After a few hours of reaction, the relatively insoluble ferrous oxalate dihydrate forms as a coordination polymer that can be filtered from the slurry. The iron (II) oxalate forms a filter cake of small, mustard-colored solids that are usually landfilled. The filtered acid returns to the pickling process.

Mixed Acid (HF and HNO_3) Recovery

The two largest industries using mixed hydrofluoric and nitric acid are stainless steel manufacturing and titanium milling/etching. In the stainless steel descaling process, oxides of iron, nickel, and chrome (as well as other alloying elements) must be removed without causing underlying attack on the base metal. The combination of using oxidizing nitric acid as a passivation agent to protect the alloy surface, while at the same time applying hydrofluoric acid to remove scale from the surface, has worked well for over fifty years.

In titanium milling operations nitric acid dissolves some transient impurities from titanium, while the hydrofluoric acid dissolves the exposed titanium. The nitric acid mitigates hydrogen embrittlement while passivating the titanium base metal. In both the titanium milling and stainless steel cleaning and passivating processes, the nitric acid concentration is greater than the hydrofluoric acid concentration. The initial hydrofluoric acid concentration in a fresh solution rarely exceeds ten percent.

$$Ti + 6HF + 4HNO_3 \rightarrow H_2TiF_6 + 4NO_2\uparrow + 4H_20_1$$

The most commonly used technologies to recover HF/HNO_3 include: Acid Sorption, Vacuum Evaporation, Pyrohydrolysis, and Nanofiltration. This highly corrosive acid combination presents a materials of construction challenge for recovery/recycle technologies. Since it etches glass as well as dissolves most metals, there are very few non-reactive containment materials. Thermoplastics such as polyethylene, polypropylene, PVDF, and Teflon are effective storage and containment materials for both hydrofluoric acid and the mixed acid HF/HNO_3. The added cost of these materials, however, is offset by the comparatively high cost of the acids.

ACID SORPTION (RETARDATION)

This resin method, previously discussed, has proven effective in recovering mixed acid for reuse. Even though the titanium, iron, and other metal byproducts of the process cannot be economically recovered or reused, the high value of the acid justifies the capital and operating expense in many cases. The acidic waste is usually neutralized with lime before the sludge is filter-pressed for disposal.

VACUUM EVAPORATION

Forced-circulation evaporation under vacuum has proven capable of recovering HF/HNO_3 while producing a titanium fluoride salt with reclaim value when used on titanium milling applications. The materials of construction, operating temperature, and process control differ somewhat from the same technology used for recovering hydrochloric acid. The process uses the forced circulation co-flash principle to evaporate hydrogen fluoride, nitric acid, and water simultaneously. The rectifier section scrubs the acids, along with some water, leaving a final stream of water condensate. The recovered metal concentrate can be crystallized or left in liquid form.

PYROHYDROLYSIS

Spray roasting technology also works on mixed acid. The capital cost is quite high, but the high cost of the acid can offset it in large stainless steel production plants. Plants producing more than forty tons of spent acid each day might consider applying pyrohydrolysis. As with pyrolytic recycle of hydrochloric acid, the location of the recycling plant and air quality restrictions should be studied.

NANOFILTRATION AND CRYSTALLIZATION (EXPERIMENTAL)

Acid recovery using nanofiltration membranes has been attempted many times over the past decades. The three problems preventing the technology from advancing as a cost-effective solution have been the concentration limitation, flux rate, lack of corrosion resistant high-pressure pumps, and robust

membranes. The ability to pass mixed acid through the membrane while sequestering the metals ions in a concentrate stream has been proven. However, as the metal ion concentration rises, the flux rate (throughput of recovered acid) diminishes. In tests at pressures up to 30 bar, the practical limit of metal ions in the spent acid was approximately 30 grams per liter.

The same acid-resistant nanofilter membranes pilot tested for mixed acid recovery are used in copper recovery in sulfate leach solutions. The copper sulfate concentrate stream from nanofiltration is further processed in a crystallizer or electrowinning cell. Trial studies on mixed acid waste from stainless cleaning lines in Sweden followed a similar approach—crystallizing the concentrate from the nanofiltration step and reprocessing the post crystallization filtrate. Crystallization of the iron fluoride hydrate ($FeF_3 \cdot 3H_2O$) proved difficult in the test trials, with the nickel and chrome hydrates even more so. The copper sulfate recovery from the concentrate of the membrane process was much simpler by comparison.

Microfiltration of the spent acid in the first step of recovering the acid was found to be imperative. Ion-selective membranes and sorption resins require protection against incursion from solids and oil that cause blinding and fouling without excellent precleaning steps. In the case of filtration of the hydrofluoric/nitric mixed acid feed, some installations employ silicon carbide microfilters and corrosion-resistant components to extract the larger molecular organics like oil, as well as any micro-solids that blind surfaces and impact the hydraulic process.

SUMMARY

Environmental Protection Agencies have set goals and standards which guide us toward what we now call ZLD (Zero Liquid Discharge). Meeting the environmental standards with minimum impact to the cost of production has become the challenge to industry. Over the past fifty years, many recovery technologies have been applied to the mining, milling, and metal finishing industries to cost effectively recover or recycle their most expensive and dangerous waste—acid. Advancements in materials and automation over that half-century have greatly reduced the capital cost of recovery and recycle, while also bringing operating costs into line. This challenge will continue.

Scientists and engineers work every day to create more cost-efficient, user friendly processes. As we advance toward ZLD, innovations in recovery technologies create co-products rather than waste products. In many cases, the co-product revenue exceeds the operating cost. The goal has not changed, but the tools to reach it have improved. As Vince Lombardi once surmised, “Perfection is not attainable, but if we chase perfection we can catch excellence.”

References

(1999). *ESTCP Cost and Performance Report: Spent Acid Recovery Using Diffusion Dialysis.* Arlington: Environmental Security Technology Certification Program.

Bill Chenevert. (2012, 11 1). *National Metal Finishing Resource Center*. Retrieved 1 8, 2013, from National Meta Finishing Resource Center: http://www.nmfrc.org

Brown, C. (1997). *Mixed Acid Recovery with the APU Acid Sorption System.* Ontario: Eco-Tec.

Calmon, C., & Gold, H. (1979). *Ion Exchange for Pollution Control* (Vol. I). Boca Raton, Florida: CRC Press Inc.

Cushnie, G. C. (2009). *Pollution Prevention and Control Technologies for Plating Operations* (Second ed.). Ann Arbor, Michigan: National Center for Manufacturing Sciences.

Dorfner, K. (1977). *Ion Exchangers: Properties and Applications.* Ann Arbor, Michigan: Ann Arbor Science Publishers Inc.

DPRA Incorporated. (1998). *Regulatory Impact Analysis of the Proposed Rule for 180-Day Accumulation Time for F006 Wastewater Treatment Sludges.* Ann Arbor: National Metal Finishing Resource Center.

Freeman, H. M. (1989). *Standard Handbook of Hazardous Waste Treatment and Disposal.* New York: McGraw-Hill Book Company.

Greiner Environmental. (1999). *Pilot of the Pollution Prevention Technology Application Analysis Template Utilizing Acid Recovery System.* Boston: U.S. Environmental Protection Agency - New England.

ICIS. (2006, August 28). *Indicative Chemical Prices A-Z*. Retrieved March 2013, from ICIS Trusted market intelligence for the global chemical, energy and fertilizer industries: http://www.icis.com/chemicals/channel-info-chemicals-a-z/

Kister, H. Z. (1992). *Evaporative Recovery Design.* (G. F. Nalven, & P. Lamb, Eds.) Boston, Massachusetts, USA: McGraw-Hill Book Company.

Mach, M. (2013). *Hydrothermal Hydrochloric Acid Regeneration: The Cost Saving, Eco Friendly Alternative.* Retrieved 3 22, 2013, from Premium DocStoc: http://premium.docstoc.com

National Lime Association. (2000, September). *Using Lime for Acid Neutralization.* Retrieved March 2013, from National Lime Association Lime The Versatile Chemical: http://www.lime.org/documents/free_downloads/acid-neut-final-2000.pdf

Schweitzer, P. A. (1988). *Handbook of Separation Techniques for Chemical Engineers* (2nd ed.). New York: McGraw-Hill Book Company.

Seader, J. D., Henley, E. J., & Roper, K. D. (2011). *Separation Process Principles: Chemical and Biochemical Operations* (3rd ed.). (J. Welter, & D. Matteson, Eds.) Hoboken, New Jersey, USA: John Wiley & Sons, Inc.

The Water Information Program. (2013). *Water Facts*. Retrieved March 2013, from The Water Information Program: Providing water information to the communities of Southwest Colorado: www.waterinfo.org/resources/water-facts

U. S. Environmental Protection Agency RCRA Enforcement Division. (1997). *Estimating Costs for the Economic Benefits of RCRA Noncompliance.* Washington: Office of Regulatory Enforcement.

U.S. Energy Information Administration. (2013, January). *Electric Power Annual 2011.* Retrieved March 2013, from http://www.eia.gov: http://www.eia.gov/electricity/annual/

U.S. Energy Information Administration. (2013, March). *Natural Gas Weekly Update.* Retrieved March 2013, from eia Natural Gas: http://www.eia.gov/natrualgas/weekly/